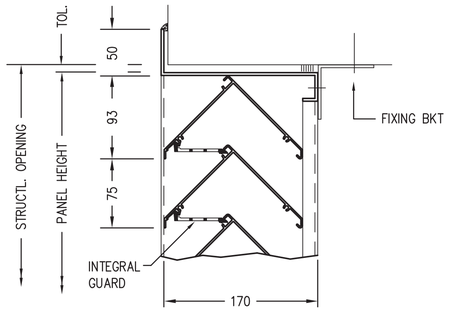

790. HEAD DETAIL

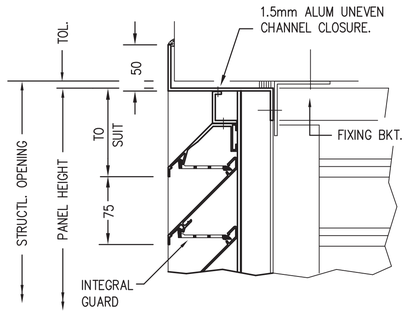

797. CORNER HEAD DETAIL

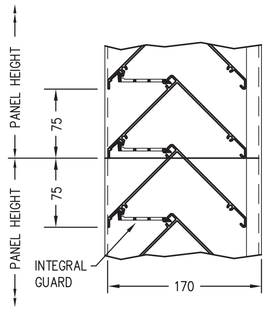

795. VERTICAL JOINT DETAIL

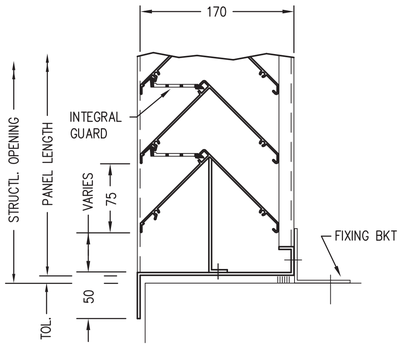

791. CILL DETAIL

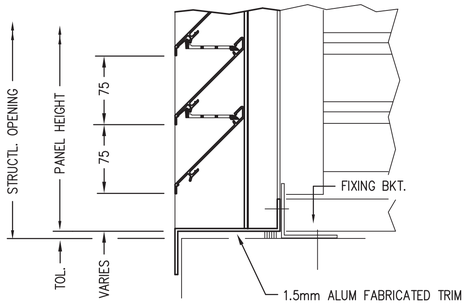

798. CORNER CILL DETAIL

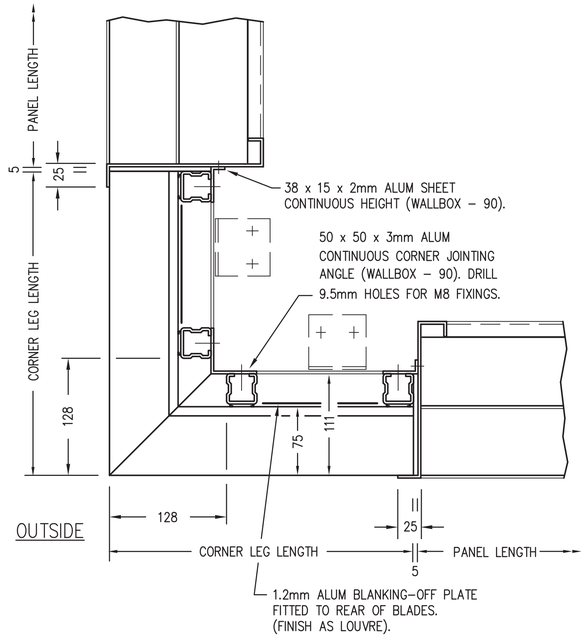

796. 90° EXTERNAL CORNER DETAIL

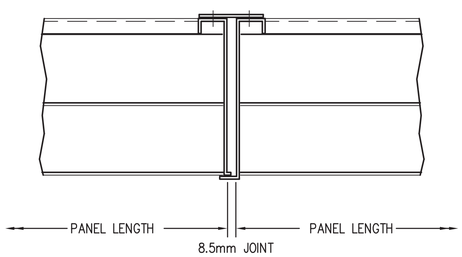

794. HORIZONTAL JOINT DETAIL

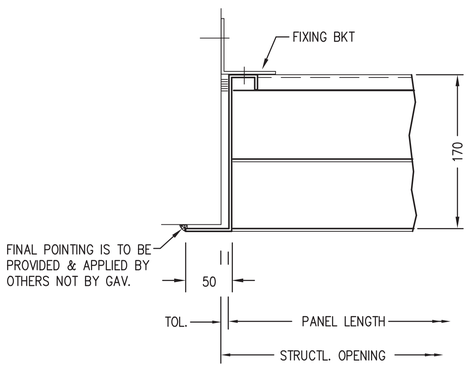

792. JAMB DETAIL

NOTE: The details shown within this drawing are for use as an aid only. If you are unsure which blocks are best suited for your application please conact our technical team on (0161) 763 3735 and we will be

© COPYRIGHT 2009 HUNTER PRODUCTS

THIS DRAWING & DESIGN ARE THE PROPERTY OF HUNTER PRODUCTS GROUP., AND MUST NOT BE COPIED OR USED IN ANY WAY PREJUDICIAL TO THEIR INTERESTS.

SO SUPPLY ONLY S&F SUPPLY & FIX

LOUVRE TYPE : LOUVRE_TYPE
TRIM TYPE : TRIM_TYPE
GUARD TYPE : GUARD_TYPE
PAINT TYPE : PAINT_TYPE
FINISH : FINISH
COLOUR : COLOUR
LOCATION : LOCATION
CUSTOMERS REF : CUST_REF'S
GAV REF : GAV_REF'S

DO NOT SCALE DRAWING, IF IN DOUBT ASK.

ALL DETAILS & DIMENSIONS MUST BE CONFIRMED AS CORRECT BEFORE MANUFACTURE OF LOUVRES CAN COMMENCE.

CUSTOMER DRAWINGS USED :–
CUST_DRAWINGS_USED

Rev	Description	Mod. By	Date

© COPYRIGHT 2009 HUNTER PRODUCTS

THIS DRAWING & DESIGN ARE THE PROPERTY OF HUNTER PRODUCTS GROUP., AND MUST NOT BE COPIED OR USED IN ANY WAY PREJUDICIAL TO THEIR INTERESTS.

Project

Customer

Drawing Title
CHEVRON LOUVRE

Location/Panel Ref. PANEL_LOCATION

Drawing No. DWG_NO | Sheet No. SHT | Revision REV

Scale SCALE | Date DATE

Computer File No. COMPUTER_FILE_NO | Project No. CONTRACT_NO

Drawn By DRAWN_BY | Checked By CHKED_BY

Coordinated By CONTRACT_ENGINEER | Approved By APP'VD_BY

GILL AIR
OFFICE SUITE 3, J2 BUSINESS PARK,
BRIDGE HALL LANE, BURY, BL9 7NY
Tel. 0161 763 3735 www.gillair.net